PEMA APSi 750

Skymaster PRO series - Making things easy.

PROGRAMMABLE – DIGITAL – VISUAL

PEMA Skymaster PRO positioner for extra-heavy work. The height, tilt and rotating speed of work piece are fully adjustable and programmable.

- Optimal and repeatable position for ergonomics, capacity increase and simulated movements for safety. As a result welding productivity can be raised significantly compared to conventional positioner.

- PRO features are available with mobile, tablet and laptop via WiFi. PRO application runs on internet browser and includes e.g. programming for the positioner, machine diagnostic, maintenance book and possibility to add notes.

- Hundreds of man-hours saved yearly compared to manual work-piece handling. With PEMA Skymaster PRO these hours can be used on actual productive work.

- Always the optimal dimensions for your product on purposes. Skymaster PRO series from 750 kg up to 35,000 kg.

Max. load (N)	7500
Rotation speed (rpm)	0,09-2
Max. rotational torque (Nm)	600
Tilting torque (Nm)	1500
Tilting / angle (°)	hydr / 135
Tilting time 0-max angle (s)	25
Table plate diameter (mm)	700
T-slots on table plate	3x M12 DIN508
Integrated grounding, max. current (A)	700
Height min-max (mm)	730-1450
Width (mm)	700
Length (mm)	1580
Weight (kg)	550
Main supply cable length (m)	12
Main supply connection 50 Hz	3x400VAC+(N)+PE
Power (A)	16

Due to continuous R&D, Pemamek Ltd reserves the right to change the specification without notice.

MORE PRODUCTIVITY

Save all positions, lifting, rotation and tilting and modify later if needed. Skymaster PRO guarantees optimal working position, always.

IMPROVED QUALITY

Good ergonomics and safety secure welder's high motivation and working quality.

DESIGNED TO LAST

Skymaster PRO positioners are engineered to endure even the most robust conditions. Partner that will not let you down.

- Always correct welding and assembly positions
- Visual programming for all movements
- Improved welding quality
- Broad hydraulic 3-axis movements
- Better working ergonomics
- Fast production start-up
- Integration to other PEMA solutions
- High-quality components
- Extensive world-wide PEMA service

MAIN MEASUREMENTS

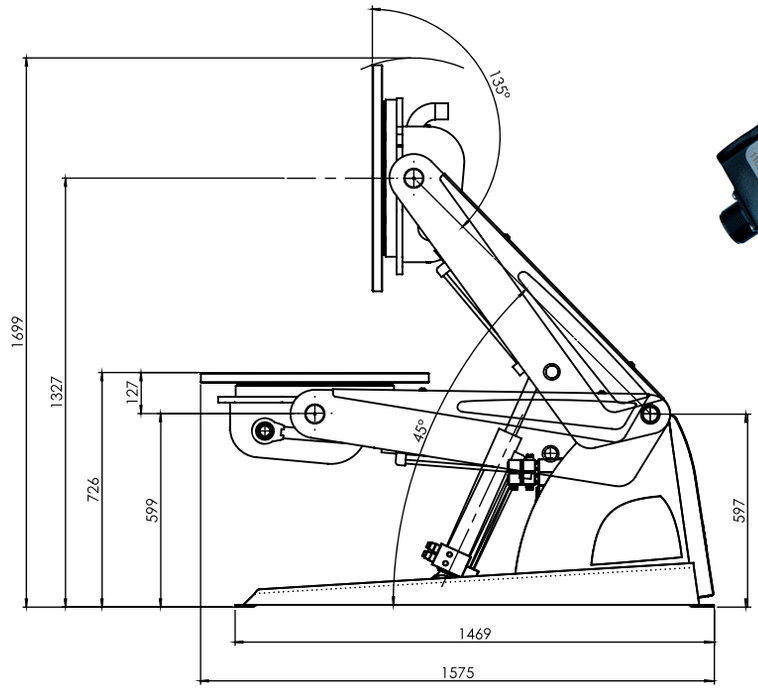

Durable, wired RC32H remote control included

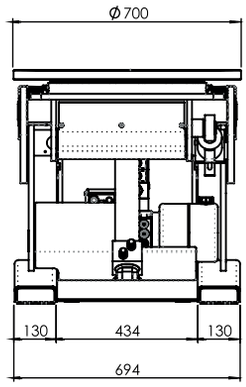

LOAD CAPACITY DIAGRAMS

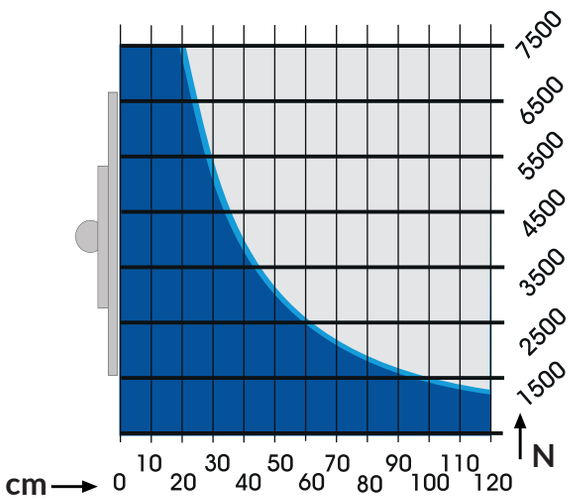

Distance from table plate to centre of gravity

Max tilting torque 1500 Nm

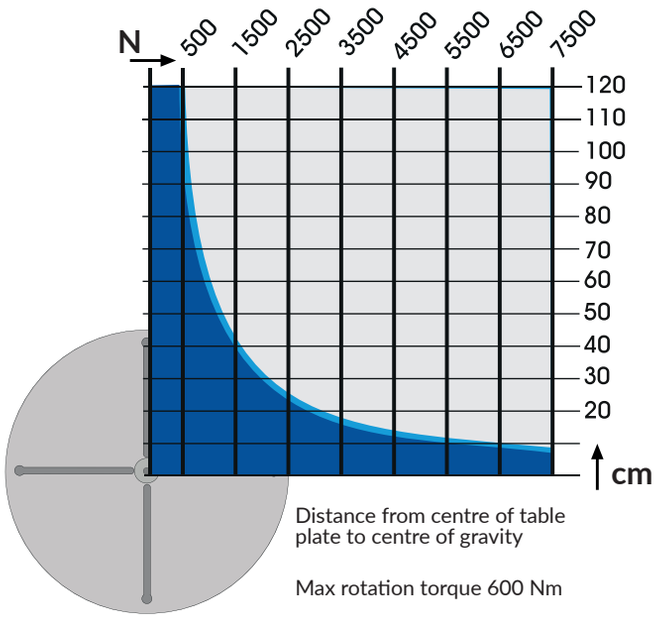

Distance from centre of table plate to centre of gravity

Max rotation torque 600 Nm

OPTIONS

- Tablet for PRO application
- Foot pedal for PRO features and start/stop of rotation in manual mode
- Foot pedal for PRO features and speed control of rotation in manual mode
- External control of rotation
- Wireless remote control

pema WELDING AUTOMATION

pemamek.com
@pemawelding

General fabrication
Heavy equipment
Offshore and process equipment
Power generation
Shipbuilding
Wind energy

Pemamek reserves the right to change specifications without notice.